FAAO sanitaryware

温州市法奥洁具有限公司
WENZHOU FAAO SANITARY WARE CO.,LTD

Tel/Whatsapp/Wechat: +86-13806879161
E-mail: fuao@fuaocn.com
Web:www.fuaocn.com

Website

WeChat

WhatsApp

Add: #8 Daizhong Road, HaichengTown, Longwan District,Wenzhou, China

FAAO sanitaryware

BATHROOM ACCESSORIES

—2026



www.fuaocn.com

Turn your product idea into reality



FAAO sanitaryware

RELIABLE
EFFICENT
PROFESSIONAL

202610

www.fuaocn.com

COMPANY PROFILE

FAAO Sanitary Ware was established in 2001. Our company is a professional manufacturer engaged in R&D, production, sales and service in the industry of **FAUCETS, BATHROOM ACCESSORIES and SMART ELECTRIC TOWEL WARMERS**. To keep achieving and maintaining a leadership position in the industry, we have our own in-house R&D department.

The president of FAAO **was a professional technician with excellent experience in the sanitary ware** industry before starting to build FAAO manufacture. Obtaining his philosophy, our team place emphasis on enhancing the quality of products and training our workers strictly. Strict quality control is performed in every procedure from material sourcing, processing and testing.

We design & develop new products every season. Many designs have owned patents. In addition, We have passed **ISO9001:2001** Quality Management System. FAAO has got **Watermark** certificate which is the most strict product quality standard in the world. Our company has obtained the honor of **National High-tech Innovation Enterprise** which is a national level honor from the government. Our marketing team is sensitive to the changing trends and fashions in the world market. Our products are sold in mo-re than 60 countries around the world. We cooperate with famous home improvement companies throughout the world with outstanding quality, competitive price and perfect services. The quality of our products generates sales allowing our marketing team to concentrate on customers' needs and satisfaction. With various unique and contemporary products, we have participated in several domestic and international exhibitions, and gained lots of positive results.

FAAO aims for product excellence and customer satisfaction. We welcome customer input towards improving products and our common marketing goals.



CERTIFICATIONS & QUALIFICATIONS

Quality Assurance for Reliable OEM & ODM Supply

We are committed to providing high-quality products through strict management systems, rellable testing and continuous improvement. Our certifications demonstrate aur dedication to product quality, environmental responsiblity and customer satisfaction.

ACS Lead Free CE SGS ISO 9001:2015 ISO 14001:2015 ISO 45001:2018



QUALITY MANAGEMENT SYSTEM

Systematic management ensures stable quality and efficient production.



CARSO - LABORATOIRE SANTÉ ENVIRONNEMENT HYGIÈNE DE LYON

Laboratoire Agréé pour les analyses d'eaux par le Ministère de la Santé

Laboratoire habilité par le Ministère chargé de la santé en application de l'article R.1321-62 du code de la santé publique

ATTESTATION DE CONFORMITE SANITAIRE

Certificate of sanitary conformity

Conformément à l'arrêté du 29 mai 1997 modifié et à la circulaire du Ministère de la santé Direction Générale de la Santé DGS/SD7A 2002 n°571 du 25 novembre 2002

Coordonnées du demandeur des essais / Contact details of the ACS owner :

WENZHOU FAAO SANITARY WARE CO., LTD.
#8 Dalzhong Road, Haicheng,
Longwan District, Wenzhou City,
Zhejiang Province
P.R. CHINA

Nom de l'accessoire représentatif / *Reference of the representative accessory* :
Mitigeur Evier / *Kitchen mixer* FA-28204

N° de dossier attribué par le laboratoire habilité / File reference : 25 ACC LY 538

Date de réalisation des essais d'inertie selon la norme XP P41-280 : Aucun essai n'est nécessaire pour délivrer l'ACS
Tests date (according to the standard XP P 41-280) : No testing is required to issue this ACS
Commentaires : Les composants organiques sont conformes à l'arrêté du 29 mai 1997 modifié. L'industriel s'engage à délivrer les preuves de la conformité des composants métalliques aux dispositions de l'arrêté du 25 juin 2020.
Comments : Organic components are compliant with the decree dated 29th May 1997 modified. The manufacturer is committed to hold on evidence of compliance with Decree June 25, 2020 regarding metallic components.

Famille d'accessoires couverte par l'ACS / *Accessories' family covered by this certificate* :
Mitigeurs Evier / *Kitchen mixers*

Références / *References* (9 references) :

FA-5506 FA-28804
FA-9631 FA-29104
FA-9632 FA-21204
FA-28204 FA-SNZ2804
FA-28704

Attestation délivrée par / *Certificate issued by* : Christelle AUTUGELLE, Responsable Laboratoire MCDE, CARSO-L.S.E.H.L. Signature :

A la date du / *Date of issue* : 10 Septembre 2025
Date d'expiration / *Expiration date* : 10 Septembre 2030
Commentaires / Comments : /

F_MCD60-3 15/09/2014 MLN



IAPMO R&T OCEANA

CERTIFICATE OF CONFORMITY

IAPMO R&T Oceana hereby grants to:

Wenzhou FAAO Sanitary Ware Co.,Ltd

8 West Dongtai Road, Haicheng, Longwan District, Wenzhou, Zhejiang China

Evaluated to:

AS/NZS 3718:2005 (Inc. Amdt 1 & 2)
Water supply -Tap ware

Manufacturer:

Wenzhou FAAO Sanitary Ware Co.,Ltd

Licence No.: WM-032224 First Certified: 17 May 2022
Certification Date: 17 May 2022 Expiry Date: 16 May 2027

ACS

Compliance with European drinking water standards.

WaterMark

Certified to Australian Water Mark standards.

Our products meet international quality standards.

PRODUCT COMPLIANCE & SAFETY

Our products comply with international safety and regional market requirements.



CE

-BATHROOM ACCESSORIES



CE

-TOWEL WARMER

Our products meet international quality standards.

GLOBAL COMPLIANCE

Our products meet international quality and safety standards,backed by authoritative certifications. These credentials ensure reliableproduct performance and give our partners greater confidence in long-term cooperation.

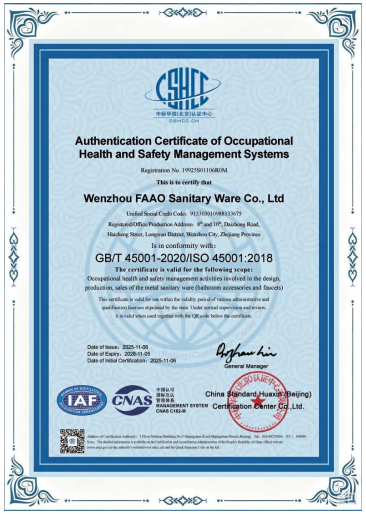

ISO 45001

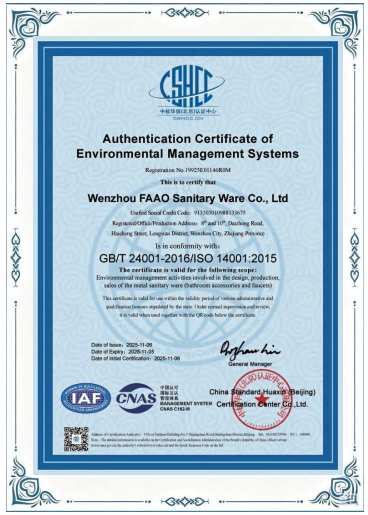

ISO 14001



ISO 9001

CUSTOM FINISHES

6 FINISH OPTIONS

one Design Multiple Finishes

DESIGNED AS A SERIES

ONE DESIGN LANGUAGE COMPLETE COLLECTION

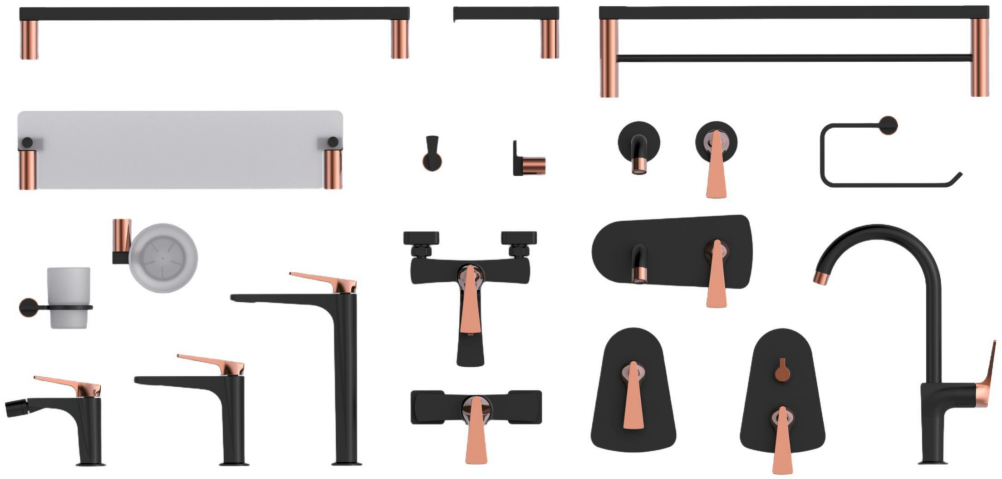



NEW 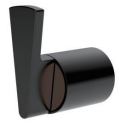 FA-BK67500 | 004

NEW  FA-BL67500 | 006

NEW  FA-CB67500 | 008

NEW  FA-WN67500 | 010

NEW  FA-BQ67500 | 012

NEW  FA-WL67500 | 014

NEW  FA-67700 | 016

NEW  FA-SG67700 | 017

NEW  FA-BK67700 | 018

NEW  FA-59500 | 020

NEW  FA-BK59500 | 022

NEW  FA-QH59500 | 024

NEW  FA-BK58900 | 026

NEW  FA-58900 | 028

NEW  FA-BK58900 | 030

NEW  FA-61300 | 032

NEW  FA-BK61300 | 034

 FA-66300 | 036

 FA-52200 | 037

 FA-51800 | 040

 FA-27200 | 042

 FA-52700 | 044

NEW  FA-GD55300-4 | 046

NEW  FA-GD55300-3 | 046

NEW  FA-QH55300-1 | 048

NEW  FA-QH55300-2 | 050

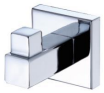 FA-51100 | 051

 FA-33500 | 053

 FA-26700 | 055

 FA-26800 | 058



Zinc Series

BATHROOM ACCESSORIES 2026



Stainless Steel Series

BATHROOM ACCESSORIES 2026


FA-55200 | 059


FA-99800 | 061


FA-52100 | 062


FA-51900 | 062


FA-88800 | 064


FA-67100 | 065


FA-39600 | 067


FA-52800 | 068


FA-5900 | 069


FA-3100 | 070


FA-9200 | 071


FA-33600 | 072


FA-GD9800 | 073


FA-8300 | 074

NEW 
FA-SN62100 | 078

NEW 
FA-SN60300 | 080

NEW 
FA-SG60300 | 082

NEW 
FA-QH60300 | 084

NEW 
FA-BR67300 | 086

NEW 
FA-BK67300 | 088

NEW 
FA-SG67300 | 090

NEW 
FA-SN61900 | 092

NEW 
FA-SG53500 | 094

NEW 
FA-SG53300 | 096

NEW 
FA-SG53200 | 097

NEW 
FA-SG53200 | 098

NEW 
FA-SG57100 | 100

NEW 
FA-BK61500 | 103

NEW 
FA-SN61500 | 104


FA-57800 | 105


FA-57200 | 112


FA-61600 | 113


FA-SN56800 | 113


FA-SN55500 | 114


FA-SN59600 | 116


FA-57600 | 117


FA-SN5400 | 118


FA-55600 | 119

FA-SN56300 | 120

FA-58600 | 122



Self-adhesive series

BATHROOM ACCESSORIES 2026

NEW  FA-BG61700 | 126

NEW  FA-61700 | 127

NEW  FA-BK61700 | 128

NEW  FA-BG36500 | 130

NEW  FA-36500 | 132

NEW  FA-GD36500 | 133

NEW  FA-BK36500 | 134

NEW  FA-SN58100 | 136

 FA-36900 | 137

 FA-BK57900 | 138



Brass series

BATHROOM ACCESSORIES 2026

 FA-31900 | 141

 FA-22700 | 142

 FA-88600 | 143

 FA-37200 | 143



Other series

BATHROOM ACCESSORIES 2026

 Kitchen accessories | 145

 Shelves | 147

 Trash bin | 156

 Clothes line | 157

 Hooks | 158

 Towel shelf | 160

 Cosmetic mirror | 162

 Automatic soap dispenser | 163

 Toilet rool holder | 165

 Basket | 167

 Floor drain | 169

 Safety grab bar | 172

 Package | 173

ZINC ALLOY

BATHROOM ACCESSORIES

SOLID QUALITY · REFINED DETAILS

Made of premium zinc alloy, our bathroom accessories combine modern aesthetics with outstanding performance, bringing durability and elegance to every bathroom space.

Durable and Sturdy

Corrosion Resistant

Refined Surface Finish







Advantages

- High strength and excellent toughness
- Corrosion and rust resistance
- Stable structure, not easy to deform
- Fine surface treatment, premium texture
- Wide range of styles and finishes

Considerations

- Heavier than plastic alternatives
- Higher cost than basic materials
- Requires professional electroplating for long-term color retention
- Not suitable for highly acidic cleaning agents

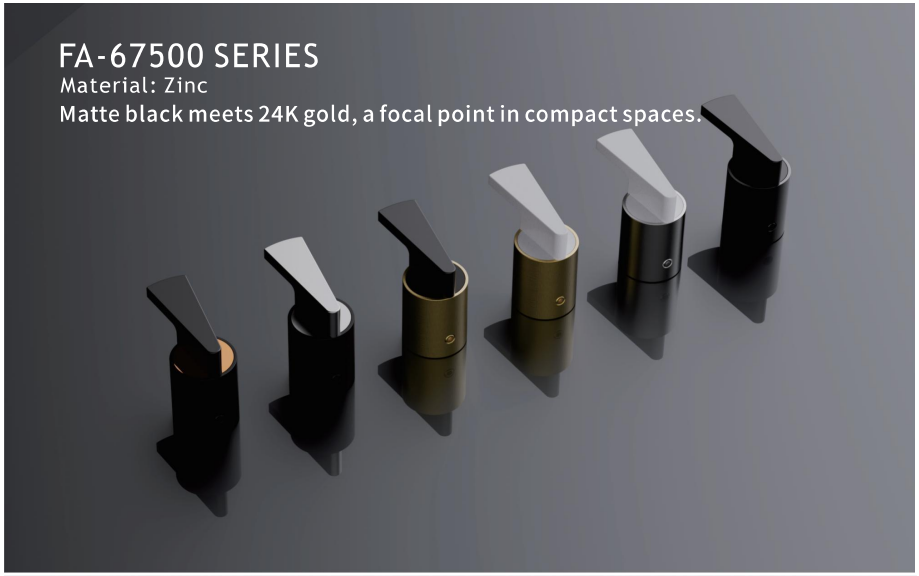

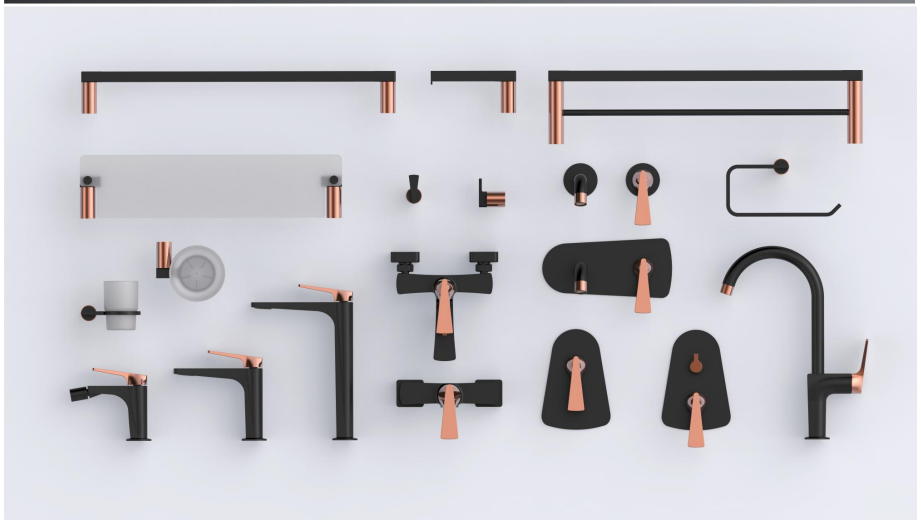

BATHROOM ACCESSORIES

FA-BK67500 SERIES

Material: Zinc

Finish: Black Rose Gold



FA-BK67554
Robe hook



FA-BK67559
Soap holder



FA-BK67558
Tumbler holder



FA-BK67551
Toilet roll holder



FA-BK67560
Towel ring



FA-BK67553
Glass shelf



FA-BK67524
Single towel bar



FA-BK67548
Double towel bar



New Arrival

FA-BL67500 SERIES

Material: Zinc

Finish: Brush Gold Black



FA-BL67554
Robe hook



FA-BL67559
Soap holder



FA-BL67558
Tumbler holder



FA-BL67551
Toilet roll holder



FA-BL67560
Towel ring



FA-BL67553
Glass shelf



FA-BL67524
Single towel bar



FA-BL67548
Double towel bar



New Arrival

FA-CB67500 SERIES

Material: Zinc

Finish: Black Chrome



FA-CB67554
Robe hook



FA-CB67559
Soap holder



FA-CB67558
Tumbler holder



FA-CB67551
Toilet roll holder



FA-CB67560
Towel ring



FA-CB67553
Glass shelf



FA-CB67524
Single towel bar



FA-CB67548
Double towel bar



New Arrival

FA-WN67500 SERIES

Material: Zinc

Finish: White Satin nickel



FA-WN67554
Robe hook



FA-WN67559
Soap holder



FA-WN67558
Tumbler holder



FA-WN67551
Toilet roll holder



FA-WN67560
Towel ring



FA-WN67553
Glass shelf



FA-WN67524
Single towel bar



FA-WN67548
Double towel bar

BATHROOM ACCESSORIES



Maximize Space, Define Your Style

Premium Metal Series

New Arrival

FA-BQ67500 SERIES

Material: Zinc

Finish: Black Gun metal



FA-BQ67554
Robe hook



FA-BQ67559
Soap holder



FA-BQ67558
Tumbler holder



FA-BQ67551
Toilet roll holder



FA-BQ67560
Towel ring



FA-BQ67553
Glass shelf



FA-BQ67524
Single towel bar



FA-BQ67548
Double towel bar



New Arrival

FA-WL67500 SERIES

Material: Zinc

Finish: White Brush gold



FA-WL67554
Robe hook



FA-WL67559
Soap holder



FA-WL67558
Tumbler holder



FA-WL67551
Toilet roll holder



FA-WL67560
Towel ring



FA-WL67553
Glass shelf



FA-WL67524
Single towel bar



FA-WL67548
Double towel bar



New Arrival

FA-67700 SERIES

Material: Zinc
Finish: Chrome



FA-67754
Robe hook



FA-67759
Soap holder



FA-67758
Tumbler holder



FA-67751
Toilet roll holder



FA-67752
Soap dispenser



FA-67760
Towel ring



FA-67724
Single towel bar



FA-67757
Toilet brush & holder

FA-SG67700 SERIES

New Arrival

Material: Zinc
Finish: Brush gold



FA-SG67754
Robe hook



FA-SG67759
Soap holder



FA-SG67758
Tumbler holder



FA-SG67751
Toilet roll holder



FA-SG67752
Soap dispenser



FA-SG67760
Towel ring



FA-SG67724
Single towel bar



FA-SG67757
Toilet brush & holder

New Arrival

FA-BK67700 SERIES

Material: Zinc
Finish: Matte Black



FA-BK67754
Robe hook



FA-BK67759
Soap holder



FA-BK67758
Tumbler holder



FA-BK67751
Toilet roll holder



FA-BK67752
Soap dispenser



FA-BK67760
Towel ring



FA-BK67724
Single towel bar



FA-BK67757
Toilet brush & holder

Zinc series

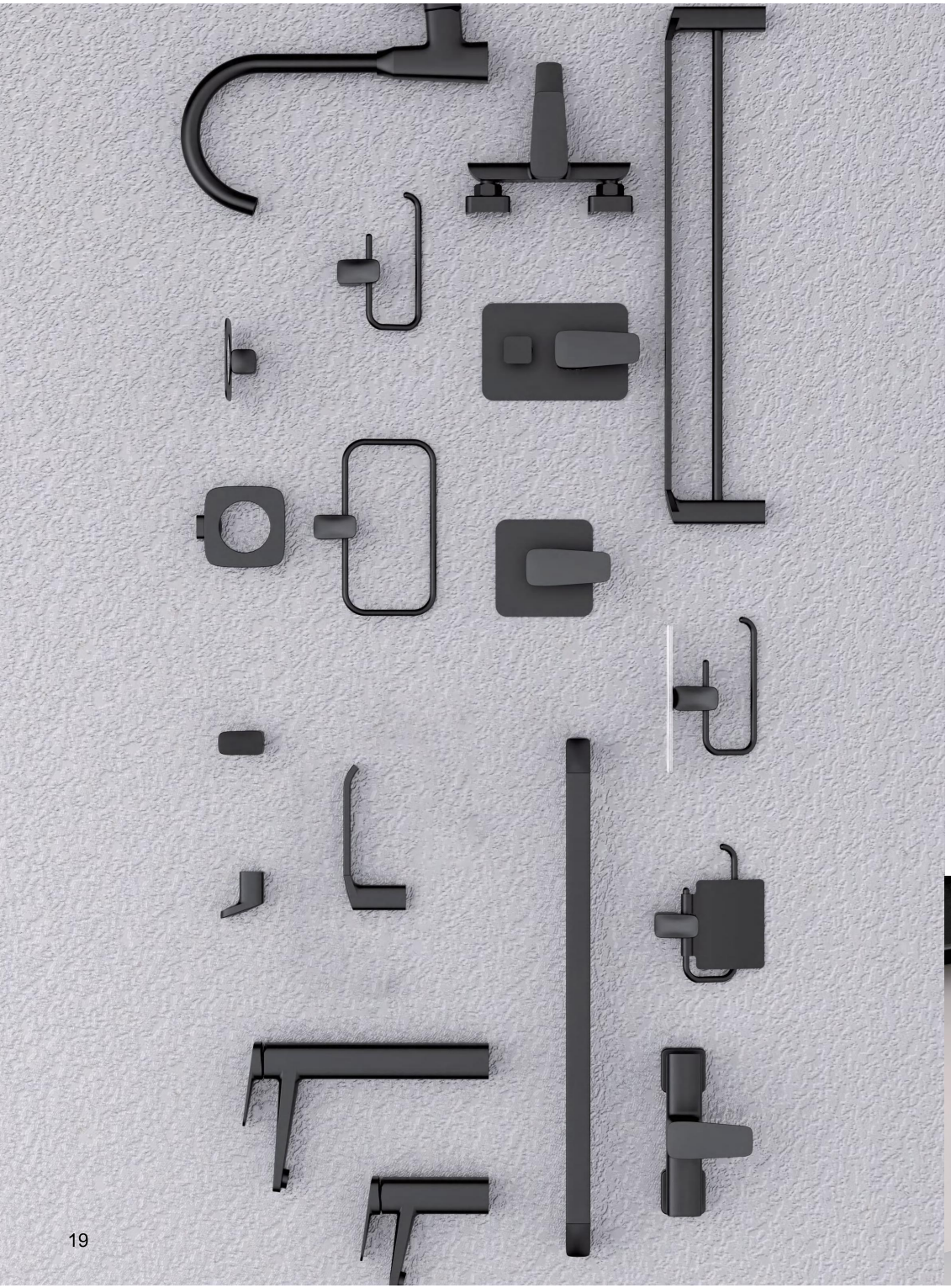

FA-59500 SERIES

Material: Zinc
Finish: Chrome



FA-59554
Robe hook



FA-59559
Soap holder



FA-59558
Tumbler holder



FA-59551
Toilet roll holder



FA-59551A
Toilet roll holder



FA-59560
Towel ring



FA-59524
Single towel bar



FA-59548
Double towel bar



FA-BK59500 SERIES

Material: Zinc

Finish: Matte Black



FA-BK59554
Robe hook



FA-BK59559
Soap holder



FA-BK59558
Tumbler holder



FA-BK59551
Toilet roll holder



FA-BK59551A
Toilet roll holder



FA-BK59560
Towel ring



FA-BK59524
Single towel bar



FA-BK59548
Double towel bar

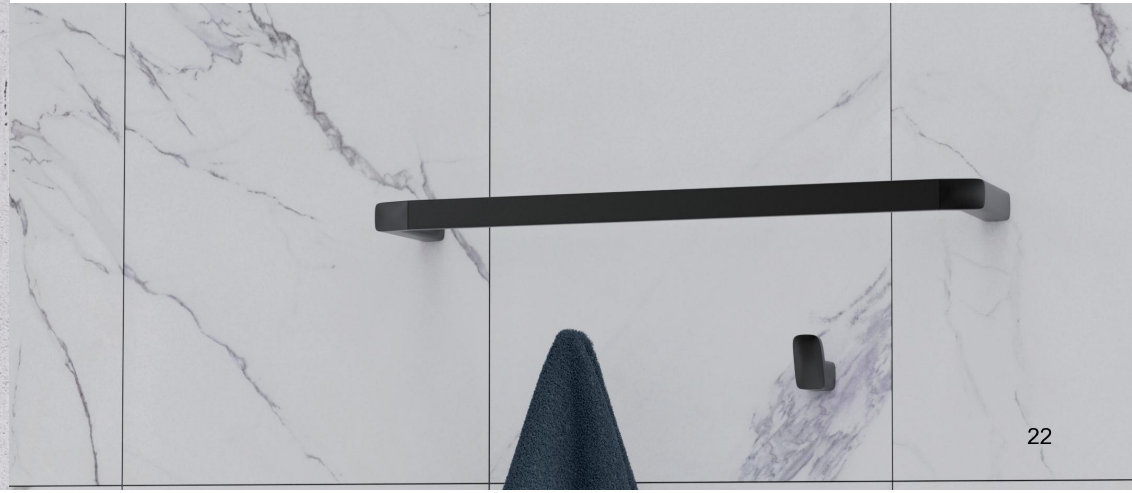



FA-QH59500 SERIES

Material: Zinc

Finish: Gun metal



FA-QH59554
Robe hook



FA-QH59559
Soap holder



FA-QH59558
Tumbler holder



FA-QH59551
Toilet roll holder



FA-QH59551A
Toilet roll holder



FA-QH59560
Towel ring



FA-QH59524
Single towel bar



FA-QH59548
Double towel bar

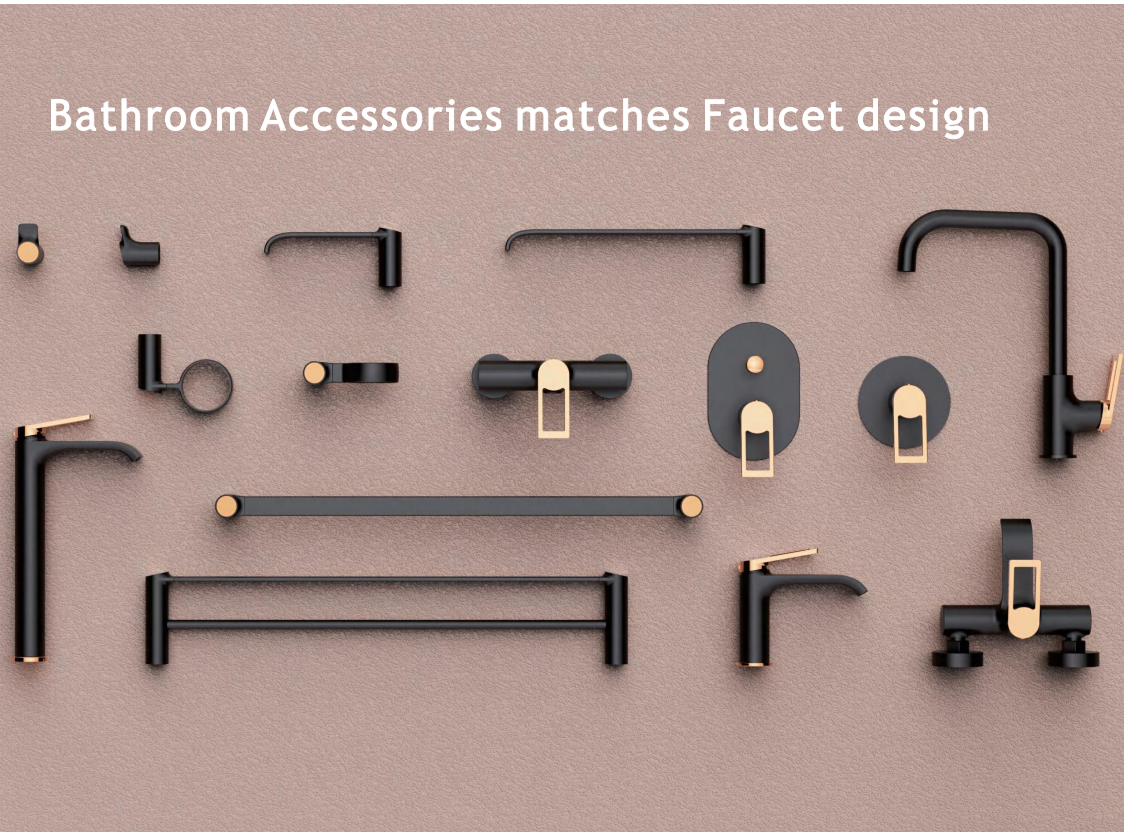

Venice Series

A Perfect Match Between Bathroom Accessories and Faucets. Complete the Look of Your Entire Bathroom.


Chrome


Brush Glod


Rose Gold


White


Matte Black


Gun Metal

FA-BK58900 SERIES

Material: Zinc
Finish: Matte Black


FA-BK58954
Robe hook


FA-BK58959
Soap holder


FA-BK58958
Tumbler holder


FA-BK58951
Toilet roll holder


FA-BK58951A
Toilet roll holder


FA-BK58960A
Towel ring


FA-BK58960
Towel ring


FA-BK58924
Single towel bar


FA-BK58948
Double towel bar


FA-BK58953
Glass shelf


FA-BK58957
Toilet brush & holder



FA-58900 SERIES

Material: Zinc
Finish: Chrome



FA-58954
Robe hook



FA-58959
Soap holder



FA-58958
Tumbler holder



FA-58951
Toilet roll holder



FA-58951A
Toilet roll holder



FA-58960A
Towel ring



FA-58960
Towel ring



FA-58924
Single towel bar



FA-58948
Double towel bar



FA-58953
Glass shelf



FA-58957
Toilet brush & holder



FA-BK58900 SERIES

Material: Zinc

Finish: Matte Black



FA-BK58954
Robe hook



FA-BK58959
Soap holder



FA-BK58958
Tumbler holder



FA-BK58951
Toilet roll holder



FA-BK58951A
Toilet roll holder



FA-BK58960A
Towel ring



FA-BK58960
Towel ring



FA-BK58924
Single towel bar



FA-BK58948
Double towel bar



FA-BK58953
Glass shelf



FA-BK58957
Toilet brush & holder

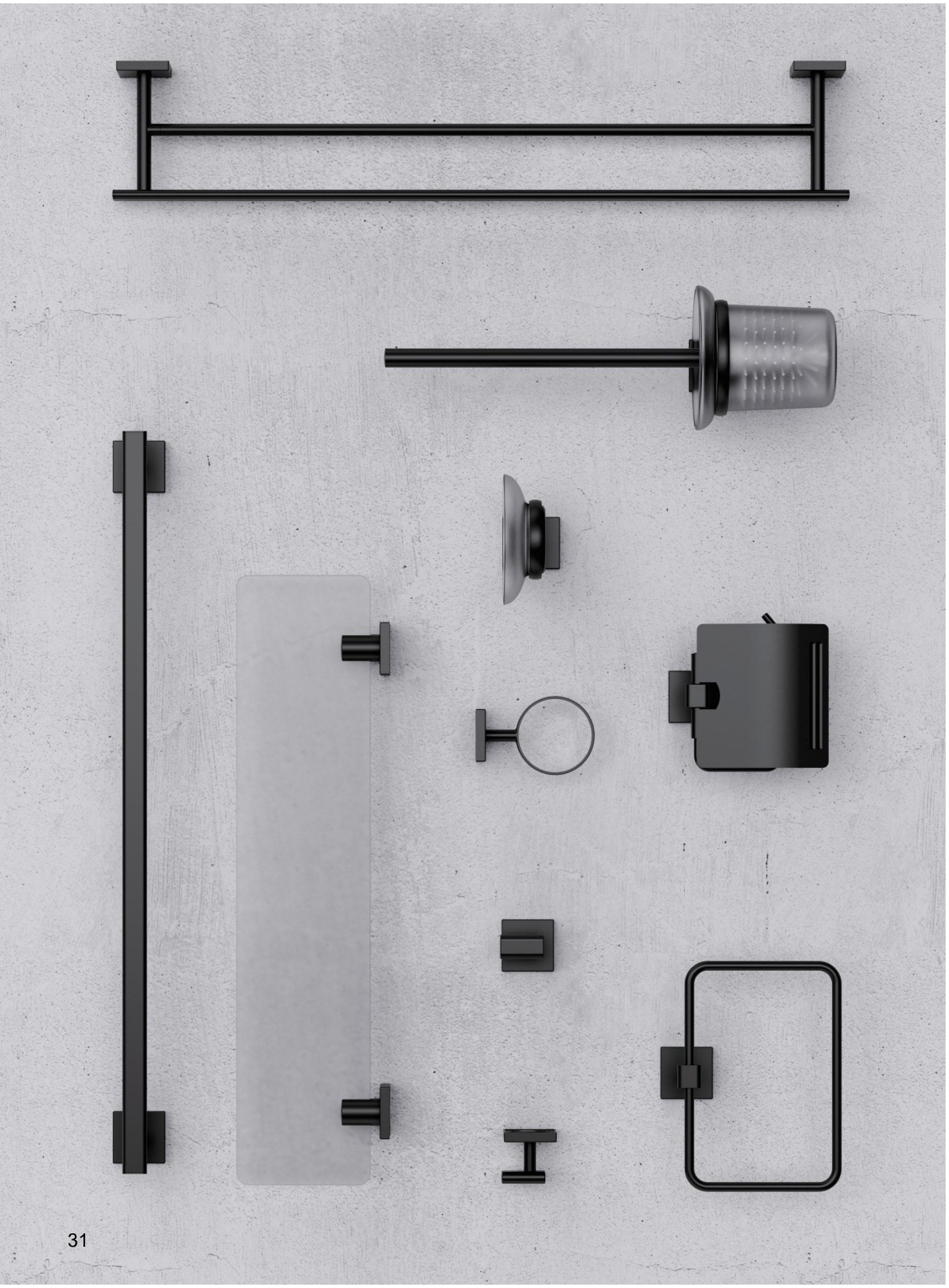

New Arrival

FA-61300 SERIES

Material: Zinc

Finish: Chrome



FA-61354
Robe hook



FA-61359
Soap holder



FA-61358
Tumbler holder



FA-61351A
Toilet roll holder



FA-61351
Toilet roll holder



FA-61360
Towel ring



FA-61324
Single towel bar



FA-61348
Double towel bar



FA-61357
Toilet brush & holder



New Arrival

FA-BK61300 SERIES

Material: Zinc
Finish: Matte Black



FA-BK61354
Robe hook



FA-BK61359
Soap holder



FA-BK61358
Tumbler holder



FA-BK61351A
Toilet roll holder



FA-BK61351
Toilet roll holder



FA-BK61360
Towel ring



FA-BK61324
Single towel bar



FA-BK61348
Double towel bar



FA-BK61357
Toilet brush & holder



FA-66300 SERIES

Material: Zinc

Finish: Chrome



FA-66354
Robe hook



FA-66359
Soap holder



FA-66358
Tumbler holder



FA-66352
Soap dispenser



FA-66351
Toilet roll holder



FA-66360
Towel ring



FA-66356
Soap basket



FA-66351B
Toilet roll holder



FA-66324
Single towel bar



FA-66348
Double towel bar



FA-66388
Towel shelf



FA-66353
Glass shelf



FA-66357
Toilet brush & holder

Smart Tips,Inspire Design
Let ’ s make bathroom more comfortable





FA-52288
Towel shelf



FA-52253
Glass shelf

FA-52200 SERIES

Material: Zinc
Finish: Chrome



FA-52254
Robe hook



FA-52259
Soap holder



FA-52258
Tumbler holder



FA-52251
Toilet roll holder



FA-52260
Towel ring



FA-52260A
Towel ring



FA-52256
Soap basket



FA-52252
Soap dispenser



FA-52251B
Toilet roll holder



FA-52224
Single towel bar



FA-52248
Double towel bar



FA-52257
Toilet brush & holder



FA-51800 SERIES

Material: Zinc
Finish: Chrome



FA-51854
Robe hook



FA-51859
Soap holder



FA-51858
Tumbler holder



FA-51851
Toilet roll holder



FA-51851B
Toilet roll holder



FA-51852
Soap dispenser



FA-51860
Towel ring



FA-51860A
Single towel bar



FA-51824
Single towel bar



FA-51848
Double towel bar



FA-51888
Towel shelf



FA-51857
Toilet brush & holder



FA-27200 SERIES

Material:Zinc Stainless Steel
Finish: Chrome



FA-27254
Robe hook



FA-27259
Soap holder



FA-27258
Tumbler holder



FA-27251A
Toilet roll holder



FA-27251
Toilet roll holder



FA-27252
Soap dispenser



FA-27260
Towel ring



FA-27224
Single towel bar



FA-27253
Glass shelf



FA-27257
Toilet brush & holder



FA-52700 SERIES

Material :Zinc Stainless Steel
Finish: Chrome



FA-52754
Robe hook



FA-52754A
Double robe hook



FA-52758
Tumbler holder



FA-52759
Soap holder



FA-52751
Toilet roll holder



FA-52760
Towel ring



FA-52724
Single towel bar



FA-52748
Double towel bar



FA-52753
Glass shelf



FA-52788
Towel shelf



FA-52757
Toilet brush & holder

Precious
Real natural shell
Natural gift for human



FA-GD55300-4 SERIES

Material: Brass
Finish: Gold



FA-GD55354-4
Robe hook



FA-GD55359-4
Soap holder



FA-GD55358-4
Tumbler holder



FA-GD55351-4
Toilet roll holder



FA-GD55360-4
Towel ring



FA-GD55324-4
Single towel bar

FA-GD55300-3 SERIES

Material: Brass
Finish: Gold



FA-GD55354-3
Robe hook



FA-GD55359-3
Soap holder



FA-GD55358-3
Tumbler holder



FA-GD55351-3
Toilet roll holder



FA-GD55360-3
Towel ring



FA-GD55324-3
Single towel bar





FA-QH55300-1 SERIES

Material: Brass
Finish: Gun Matal



FA-QH55354-1
Robe hook



FA-QH55359-1
Soap holder



FA-QH55358-1
Tumbler holder



FA-QH55351-1
Toilet roll holder



FA-QH55360-1
Towel ring



FA-QH55324-1
Single towel bar



FA-QH55300-2 SERIES

Material: Brass
Finish: Gun Metal



FA-QH55354-2
Robe hook



FA-QH55359-2
Soap holder



FA-QH55358-2
Tumbler holder



FA-QH55351-2
Toilet roll holder



FA-QH55360-2
Towel ring



FA-QH55324-2
Single towel bar

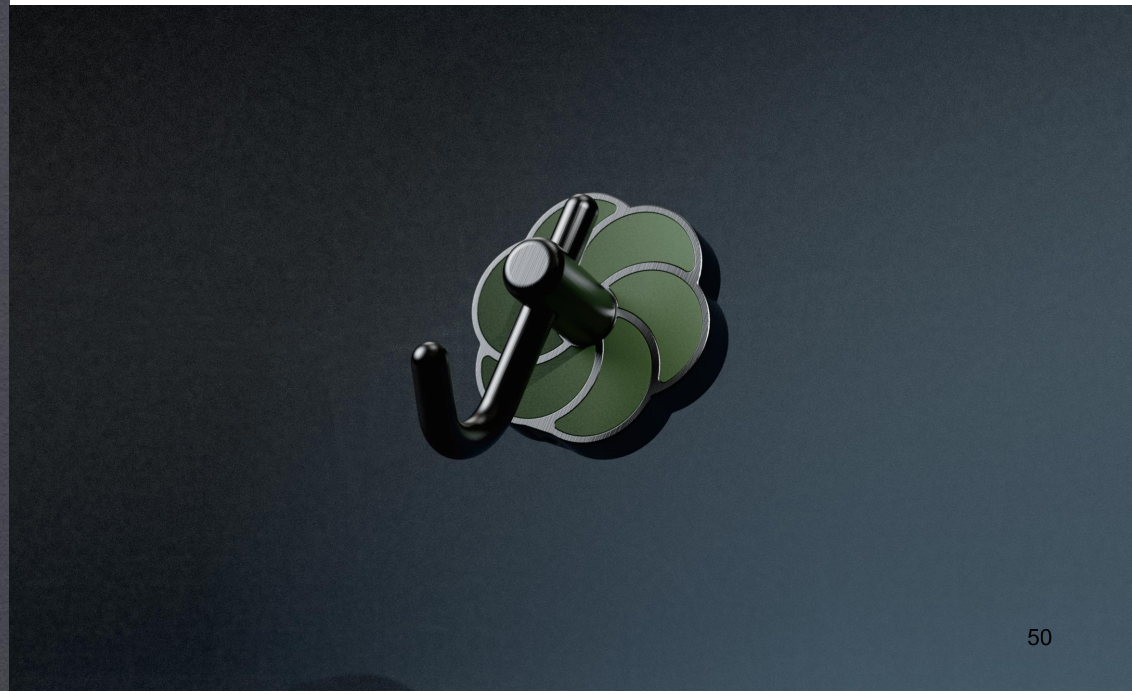

FA-51100 SERIES

Material: Zinc
Finish: Chrome



FA-51154
Robe hook

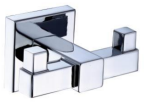

FA-51154A
Double robe hook

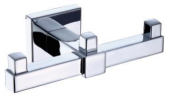

FA-51154B
Triple robe hook



FA-51159
Soap holder



FA-51158
Tumbler holder



FA-51160
Towel ring



FA-51151
Toilet roll holder



FA-51151A
Toilet roll holder



FA-51124
Single towel bar



FA-51148
Double towel bar



FA-51188
Towel shelf

FA-51100 SERIES

Material: Zinc
Finish: Chrome

Zinc series



FA-51153
Glass shelf



FA-51122
Double flexible towel bar



FA-51123
Triple flexible towel bar



FA-51166
Hair dryer holder

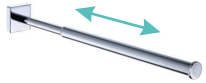

FA-51122T
Single pull-out towel bar



FA-51157
Toilet brush & holder

FA-33500 SERIES

Material: Zinc

Finish: Chrome



FA-33554C
Single robe hook



FA-33554
Double robe hook



FA-33554A
Triple robe hook



FA-33554B
Quadruple robe hook



FA-33559
Soap holder



FA-33558
Tumbler holder



FA-33551
Toilet roll holder



FA-33551A
Toilet roll holder



FA-33551B
Toilet roll holder



FA-33560
Towel ring



FA-33566
Hair dryer holder



FA-33557
Toilet brush & holder

FA-33500 SERIES

Material: Zinc

Finish: Chrome

Zinc series



FA-33522
Double flexible towel bar



FA-33523
Triple flexible towel bar



FA-33553
Glass shelf



FA-33524
Single towel bar



FA-33548
Double towel bar



FA-33588
Towel shelf



FA-33522T
Single pull-out towel bar

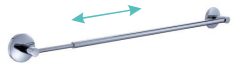

FA-33524T
Single pull-out towel bar

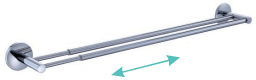

FA-33548T
Double pull-out towel bar

FA-26700 SERIES

Material: Zinc

Finish: Chrome



FA-26754
Robe hook



FA-26759
Soap holder



FA-26758
Tumbler holder



FA-26751
Toilet roll holder



FA-26751A
Toilet roll holder



FA-26760
Towel ring



FA-26752
Soap dispenser



FA-26724
Single towel bar



FA-26748
Double towel bar



FA-26753
Glass shelf



FA-26757
Toilet brush & holder

FA-BK26700 SERIES

Material: Zinc

Finish: Matte Black



FA-BK26754
Robe hook



FA-BK26759
Soap holder



FA-BK26758
Tumbler holder



FA-BK26751
Toilet roll holder



FA-BK26751A
Toilet roll holder



FA-BK26760
Towel ring



FA-BK26752
Soap dispenser



FA-BK26724
Single towel bar



FA-BK26748
Double towel bar



FA-BK26753
Glass shelf



FA-BK26757
Toilet brush & holder

Zinc series

FA-26800 SERIES

Material: Zinc
Finish: Chrome



FA-26854
Robe hook



FA-26859
Soap holder



FA-26858
Tumbler holder



FA-26851
Toilet roll holder



FA-26851A
Toilet roll holder



FA-26860
Towel ring



FA-26852
Soap dispenser



FA-26824
Single towel bar



FA-26848
Double towel bar



FA-26853
Glass shelf



FA-26857
Toilet brush & holder

FA-BK26800 SERIES

Material: Zinc
Finish: Matte Black



FA-BK26854
Robe hook



FA-BK26859
Soap holder



FA-BK26858
Tumbler holder



FA-BK26851
Toilet roll holder



FA-BK26851A
Toilet roll holder



FA-BK26860
Towel ring



FA-BK26852
Soap dispenser



FA-BK26824
Single towel bar



FA-BK26848
Double towel bar



FA-BK26853
Glass shelf



FA-BK26857
Toilet brush & holder

Zinc series

FA-55200 SERIES

Material:Zinc
Finish: Chrome



FA-55254
Robe hook



FA-55259
Soap holder



FA-55258
Tumbler holder



FA-55251
Toilet roll holder



FA-55256
Soap basket



FA-55260
Towel ring



FA-55252
Soap dispenser



FA-55251B
Toilet roll holder



FA-55224
Single towel bar



FA-55248
Double towel bar



FA-55253
Glass shelf



FA-55257
Toilet brush & holder

FA-22700 SERIES

Material: Zinc
Finish: Chrome



FA-22754
Robe hook



FA-22759
Soap holder



FA-22758
Tumbler holder



FA-22751A
Toilet roll holder



FA-22756
Soap basket



FA-22760
Towel ring



FA-22724
Single towel bar



FA-22748
Double towel bar



FA-22752
Soap dispenser

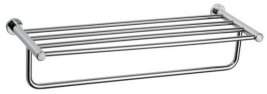

FA-22788
Towel shelf



FA-22753
Glass shelf



FA-22757
Toilet brush & holder

FA-99800 SERIES

Material:Zinc
Finish: Chrome



FA-99854
Robe hook



FA-99859
Soap holder



FA-99858
Tumbler holder



FA-99852
Soap dispenser



FA-99851
Toilet roll holder



FA-99860
Towel ring



FA-99856
Soap basket



FA-99851B
Toilet roll holder



FA-99824
Single towel bar



FA-99848
Double towel bar



FA-99888
Towel shelf



FA-99853
Glass shelf



FA-99857
Toilet brush & holder

FA-52100 SERIES

Material: Zinc
Finish: Chrome



FA-52154
Robe hook



FA-52151
Toilet roll holder



FA-52159
Soap holder



FA-52158
Tumbler holder



FA-52160
Towel ring



FA-52124
Single towel bar



FA-52148
Double towel bar

FA-51900 SERIES

Material:Zinc
Finish: Chrome



FA-51954
Robe hook



FA-51951
Toilet roll holder



FA-51959
Soap holder



FA-51958
Tumbler holder



FA-51960
Towel ring



FA-51924
Single towel bar



FA-51948
Double towel bar



FA-88800 SERIES

Materialc: Zinc

Finish: Chrome



FA-88854
Robe hook



FA-88859
Soap holder



FA-88858
Tumbler holder



FA-88852
Soap dispenser



FA-88851
Toilet roll holder



FA-88860
Towel ring



FA-88856
Soap basket



FA-88851B
Toilet roll holder



FA-88824
Single towel bar



FA-88848
Double towel bar



FA-88888
Towel shelf



FA-88853
Glass shelf



FA-88857
Toilet brush & holder



FA-BK67100 SERIES

New Arrival

Material: Zinc
Finish: Matte Black



FA-BK67154
Robe hook



FA-BK67159
Soap holder



FA-BK67158
Tumbler holder



FA-BK67151
Toilet roll holder



FA-BK67160
Towel ring



FA-BK67124
Single towel bar

New Arrival — FA-67100 SERIES

Material: Zinc
Finish: Chrome



FA-BK67154
Robe hook



FA-BK67159
Soap holder



FA-BK67158
Tumbler holder



FA-BK67151
Toilet roll holder



FA-BK67160
Towel ring



FA-BK67124
Single towel bar



FA-39600 SERIES

Material: Zinc
Finish: Chrome



FA-39654
Robe hook



FA-39654A
Robe hook



FA-39658
Tumbler holder



FA-39652
Soap dispenser



FA-39659
Soap holder



FA-39651
Toilet roll holder



FA-39660
Towel ring



FA-39624
Single towel bar



FA-39657
Toilet brush & holder

FA-52800 SERIES

Material: Zinc
Finish: Chrome



FA-52854
Robe hook



FA-52851
Toilet roll holder



FA-52871
Toilet roll holder



FA-52860
Towel ring



FA-52824
Single towel bar

FA-RB52800 SERIES

Material: Zinc
Finish: ORB



FA-RB52854
Robe hook



FA-RB52851
Toilet roll holder



FA-RB52871
Toilet roll holder



FA-RB52860
Towel ring



FA-RB52824
Single towel bar

FA-5900 SERIES

Material: Zinc
Finish: Chrome



FA-5954
Robe hook



FA-5952
Soap dispenser



FA-5958
Tumbler holder



FA-5951
Toilet roll holder



FA-5951A
Toilet roll holder



FA-5951C
Toilet roll holder



FA-5951B
Toilet roll holder



FA-5956
Soap basket



FA-5959
Soap holder



FA-5960
Towel ring



FA-5924
Single towel bar



FA-5948
Double towel bar



FA-5953
Glass shelf



FA-5957
Toilet brush & holder

FA-3100 SERIES

Material: Zinc
Finish: Chrome



FA-3154
Robe hook



FA-3155
Double tumbler holder



FA-3152
Soap dispenser



FA-3158
Tumbler holder



FA-3151
Toilet roll holder



FA-3151A
Toilet roll holder



FA-3160
Towel ring



FA-3122
Double flexible towel bar



FA-3156
Soap basket



FA-3159
Soap holder



FA-3166
Hair dryer holder



FA-3153
Glass shelf



FA-3124
Single towel bar



FA-3148
Double towel bar



FA-3160
Toilet brush & holder

Zinc series

FA-9200 SERIES

Material: Zinc
Finish: Chrome



FA-9254
Robe hook



FA-9259
Soap holder



FA-9258
Tumbler holder



FA-9251
Toilet roll holder



FA-9251A
Toilet roll holder



FA-9255
Double tumbler holder



FA-9260
Towel ring



FA-9256
Soap basket



FA-9224
Single towel bar



FA-9248
Double towel bar



FA-9257
Toilet brush & holder

FA-33600 SERIES

Material: SUS201 Zinc
Finish: Chrome



FA-33654
Robe hook



FA-33658
Tumbler holder



FA-33655
Double tumbler holder



FA-33652
Soap dispenser



FA-33659
Soap holder



FA-33656
Soap basket



FA-33651
Toilet roll holder



FA-33660
Towel ring



FA-33624
Single towel bar



FA-33648
Double towel bar

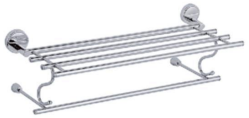

FA-33688
Towel shelf



FA-33653
Glass shelf



FA-33657
Toilet brush & holder

FA-GD9800 SERIES

Material: Zinc Ceramics

Finish: Gold



FA-GD9854
Robe hook



FA-GD9859
Soap holder



FA-GD9858
Tumbler holder



FA-GD9855
Double tumbler holder



FA-GD9852
Soap dispenser



FA-GD9851
Toilet roll holder



FA-GD9856
Soap basket



FA-GD9860
Towel ring



FA-GD9824
Single towel bar



FA-GD9848
Double towel bar



FA-GD9888
Towel shelf



FA-GD9853
Glass shelf



FA-GD9857
Toilet brush & holder

FA-8300 SERIES

Material: Zinc Ceramics

Finish: Chrome



FA-8354
Robe hook



FA-8358
Tumbler holder



FA-8355
Double tumbler holder



FA-8359
Soap holder



FA-8356
Soap basket



FA-8351
Toilet roll holder



FA-8352
Soap dispenser



FA-8360
Towel ring



FA-8324
Single towel bar



FA-8348
Double towel bar



FA-8353
Glass shelf



FA-8357
Toilet brush & holder

STAINLESS STEEL

BATHROOM ACCESSORIES









DURABLE

RUST RESISTANT

304
STAINLESS STEEL

EASY TO CLEAN



New Arrival

FA-SN62100 SERIES

Material: SUS304
Finish: Brush nickel



FA-SN62154
Robe hook



FA-SN62154A
Robe hook



FA-SN62159
Soap holder



FA-SN62151
Toilet roll holder



FA-SN62152
Soap dispenser



FA-SN62158
Tumbler holder



FA-SN62160
Towel ring



FA-SN62124
Single towel bar



FA-SN62157
Toilet brush & holder

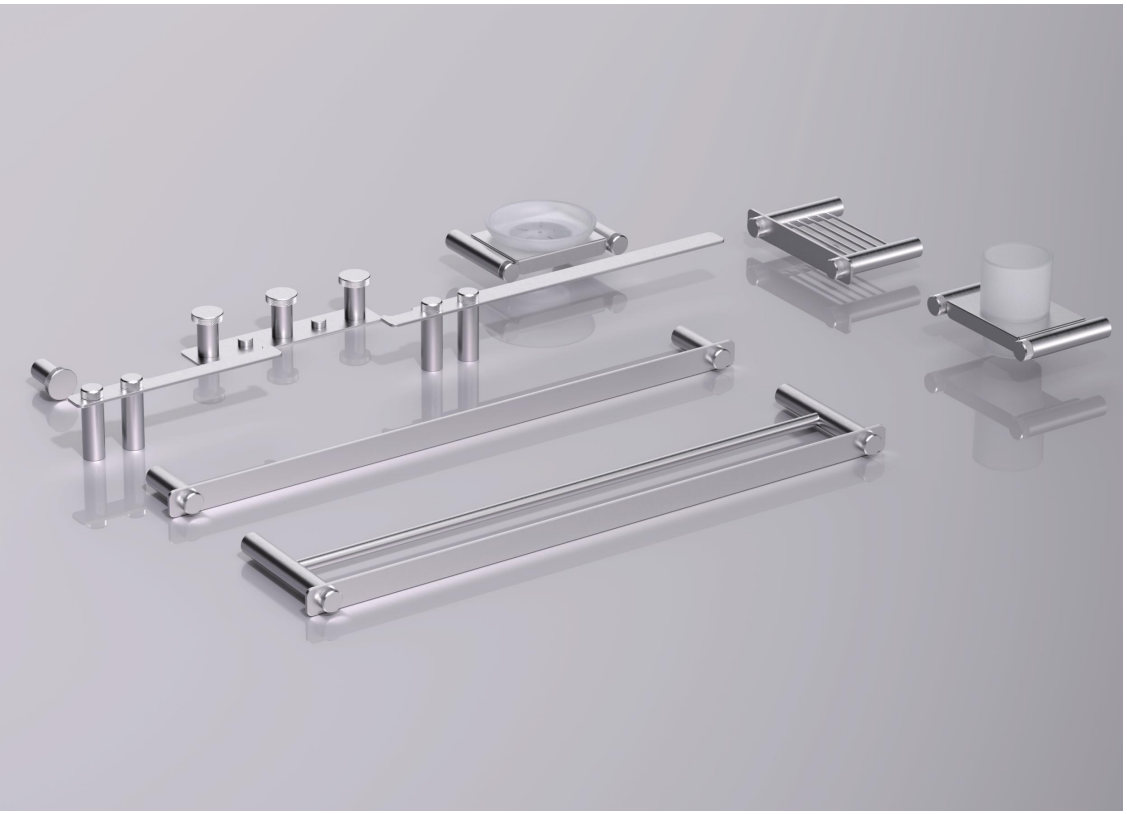

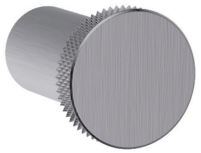

FA-SN60354
Brushed Nickel

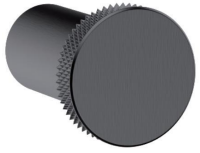

FA-QH60354
Gun Metal

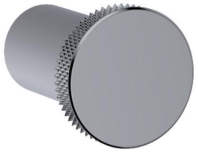

FA-60354
Chrome



FA-BK60354
Matte Black

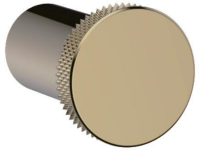

FA-GD60354
Glod

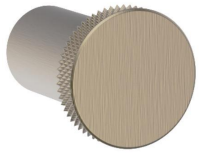

FA-SG60354
Brushed Gold

New Arrival

FA-SN60300 SERIES

Material: SUS304
Finish: Brush nickel



FA-SN60354
Robe hook



FA-SN60354A
Robe hook



FA-SN60356
Soap basket



FA-SN60359
Soap holder



FA-SN60358
Tumbler holder



FA-SN60352
Soap dispenser



FA-SN60351
Toilet roll holder



FA-SN60360
Towel ring



FA-SN60351B
Toilet roll holder



FA-SN60324
Single towel bar



FA-SN60348
Double towel bar



FA-SN60357
Toilet brush & holder



New Arrival

FA-SG60300 SERIES

Material: SUS304
Finish: Brush gold



FA-SG60354
Robe hook



FA-SG60354A
Robe hook



FA-SG60356
Soap basket



FA-SG60359
Soap holder

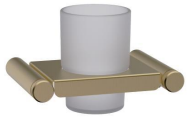

FA-SG60358
Tumbler holder



FA-SG60352
Soap dispenser



FA-SG60351
Toilet roll holder



FA-SG60360
Towel ring



FA-SG60351B
Toilet roll holder



FA-SG60324
Single towel bar



FA-SG60348
Double towel bar



FA-SG60357
Toilet brush & holder



New Arrival

FA-QH60300 SERIES

Material: SUS304
Finish: Gun Metal



FA-QH60354
Robe hook



FA-QH60354A
Robe hook



FA-QH60356
Soap basket



FA-QH60359
Soap holder



FA-QH60358
Tumbler holder



FA-QH60352
Soap dispenser



FA-QH60351
Toilet roll holder



FA-QH60360
Towel ring



FA-QH60351B
Toilet roll holder



FA-QH60324
Single towel bar



FA-QH60348
Double towel bar



FA-QH60357
Toilet brush & holder



New Arrival

FA-BR67300 SERIES

Material: SUS304
Finish: Black & Rose Gold

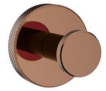

FA-BR67354
Robe hook



FA-BR67359
Soap holder



FA-BR67358
Tumbler holder



FA-BR67351
Toilet roll holder



FA-BR67360
Towel ring



FA-BR67360A
Towel ring



FA-BR67324
Single towel bar

FA-BK67300 SERIES

Redefining Bathroom Rituals, One Groove at a Time

Each groove is CNC-machined for enhanced grip and dimensional aesthetics





Turn Your Product Idea Into Reality

Material: SUS304
Finish: Matte Black



FA-BK67354
Robe hook



FA-BK67359
Soap holder



FA-BK67358
Tumbler holder



FA-BK67351
Toilet roll holder



FA-BK67360
Towel ring



FA-BK67360A
Towel ring



FA-BK67324
Single towel bar

Anti-slip Details, Handcrafted Precision

Solid Brass Knurling · Patina of Time

Redefining Bathroom Rituals, One Groove at a Time





New Arrival

FA-SH67300 SERIES

Material: SUS304
Finish: Brush Gold



FA-SH67354
Robe hook



FA-SH67359
Soap holder



FA-SH67358
Tumbler holder



FA-SH67351
Toilet roll holder



FA-SH67360
Towel ring



FA-SH67360A
Towel ring



FA-SH67324
Single towel bar



FA-SN61954
Brushed Nickel



FA-QH61954
Gun Metal



FA-61954
Mirror Polish



FA-BK61954
Matte Black



FA-GD61954
Glod



FA-SG61954
Brushed Gold

New Arrival

FA-SN61900 SERIES

Material: SUS304
Finish: Brush nickel



FA-SN61954
Robe hook



FA-SN61959
Soap holder



FA-SN61958
Tumbler holder



FA-SN61952
Soap dispenser



FA-SN61956
Soap basket



FA-SN61951B
Toilet roll holder



FA-SN61951
Toilet roll holder



FA-SN61960
Towel ring



FA-SN61953
Glass shelf



FA-SN61924
Single towel bar



FA-SN61948
Double towel bar



FA-SN61957
Toilet brush & holder

FAAO sanitaryware

SUS304
Stainless steel Bathroom Accessories



FA-SG53500 SERIES

Material: SUS 304 Acrylic
Finish: Brush Gold



FA-SG53554
Robe hook



FA-SG53551
Toilet roll holder



FA-SG53560
Towel ring



FA-SG53524
Single towel bar

ROBE HOOKS

Everywhere in life,
it is convenient and within reach
Can be hung in multiple scenarios such as kitchen/bathroom

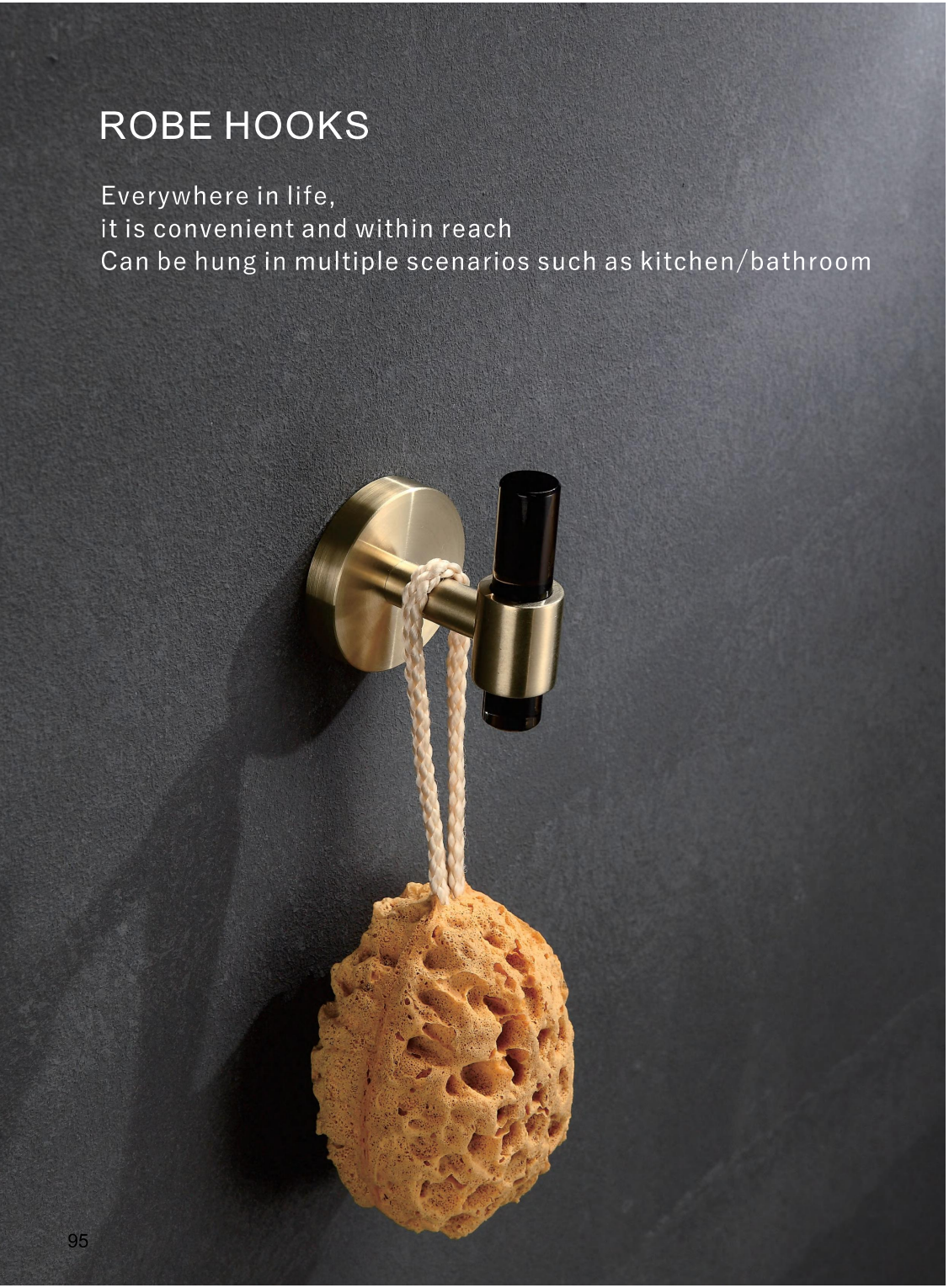



FA-SG53300 SERIES

Material: SUS 304 Acrylic
Finish: Brush Gold



FA-SG53354
Robe hook



FA-SG53351
Toilet roll holder



FA-SG53360
Towel ring



FA-SG53324
Single towel bar

FA-SG53200 SERIES

Material: SUS 304 Walnut wood
Finish: Brush Gold



FA-SG53254
Robe hook



FA-SG53251
Toilet roll holder



FA-SG53260
Towel ring



FA-SG53224
Single towel bar



FA-SG53100 SERIES

Material: SUS 304 Beech wood
Finish: Brush Gold



FA-SG53154
Robe hook



FA-SG53151
Toilet roll holder



FA-SG53160
Towel ring



FA-SG53124
Single towel bar





FA-SG57100 SERIES

Material:SUS304
Finish:Brush Gold



FA-SG57154
Robe hook



FA-SG57159
Soap holder



FA-SG57160
Towel ring



FA-SG57151
Toilet roll holder



FA-SG57124
Single towel bar



FA-SG57148
Double towel bar



FA-BK61500 SERIES

New Arrival

Material: SUS304
Finish: Matte Black



FA-BK61554
Robe hook



FA-BK61556
Soap holder



FA-BK61558
Tumbler holder



FA-BK61551
Toilet roll holder



FA-BK61560
Towel ring



FA-BK61524
Single towel bar



FA-BK61548
Double towel bar



FA-BK61557
Toilet brush & holder

New Arrival

FA-SN61500 SERIES

Material: SUS304
Finish: Brush nickel



FA-SN61554
Robe hook



FA-SN61556
Soap holder



FA-SN61558
Tumbler holder



FA-SN61551
Toilet roll holder



FA-SN61560
Towel ring



FA-SN61524
Single towel bar



FA-SN61548
Double towel bar



FA-SN61557
Toilet brush & holder



FA-57800 SERIES

Material: SUS304
Finish: Mirror Polish



FA-57854
Robe hook



FA-57859
Soap holder



FA-57856
Soap holder



FA-57851
Toilet roll holder



FA-57860A
towel ring



FA-57858
Tumbler holder



FA-57872
Toilet roll holder



FA-57860
Towel ring



FA-57824-60
Single towel bar



FA-57848
Double towel bar



FA-57857
Toilet brush & holder

FA-SN57800 SERIES

Material: SUS304
Finish: Brush Nickel



FA-SN57854
Robe hook



FA-SN57859
Soap holder



FA-SN57856
Soap holder



FA-SN57851
Toilet roll holder



FA-SN57860A
towel ring



FA-SN57858
Tumbler holder



FA-SN57872
Toilet roll holder



FA-SN57860
Towel ring



FA-SN57824-60
Single towel bar



FA-SN57848
Double towel bar



FA-SN57857
Toilet brush & holder

Stainless steel series



FA-QH57800 SERIES

Material: SUS304
Finish: Gun Metal



FA-QH57854
Robe hook



FA-QH57859
Soap holder



FA-QH57856
Soap holder



FA-QH57851
Toilet roll holder



FA-QH57858
Tumbler holder



FA-QH57860A
Towel ring



FA-QH57860
Towel ring



FA-QH57824-60
Single towel bar



FA-QH57848
Double towel bar



FA-QH57857
Toilet brush & holder

FA-SG57800 SERIES

Material: SUS304
Finish: Brush Gold



FA-SG57854
Robe hook



FA-SG57859
Soap holder



FA-SG57856
Soap holder



FA-SG57851
Toilet roll holder



FA-SG57858
Tumbler holder



FA-SG57860A
towel ring



FA-SG57860
Towel ring



FA-SG57824-60
Single towel bar



FA-SG57848
Double towel bar



FA-SG57857
Toilet brush & holder

FA-BK57800 SERIES

Material: SUS304
Finish: Black Matte



FA-BK57854
Robe hook



FA-BK57859
Soap holder



FA-BK57856
Soap holder



FA-BK57851
Toilet roll holder



FA-BK57858
Tumbler holder



FA-BK57860A
towel ring



FA-BK57860
Towel ring



FA-BK57824-60
Single towel bar



FA-BK57848
Double towel bar



FA-BK57857
Toilet brush & holder

Stainless steel series







From Rongzhen's attitude towards life, this is the focus of home

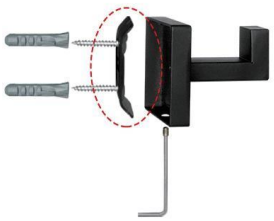

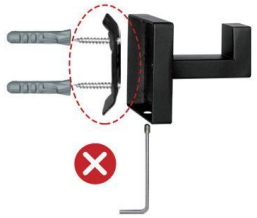

Do not install in reverse

FA-SG57200 SERIES

Material:SUS304



FA-57254
Mirror Polish



FA-SN57254
Brushed Nickel



FA-BK57254
Matte Black



FA-SG57254
Brush Gold



FA-57254
Robe hook



FA-57251
Toilet roll holder



FA-57260
Towel ring



FA-57259
Soap holder



FA-57258
Tumbler holder



FA-57224-60
Single towel bar



FA-57248
Double towel bar

FA-61600 SERIES

Material: SUS304
Finish:Mirror Poilsh



FA-61654
Robe hook



FA-61651
Toilet roll holder



FA-61656
Soap holder



FA-61660
Towel ring



FA-61624
Single towel bar

FA-SN56800 SERIES

Material: SUS304
Finish: Brush Nickel



FA-SN56854
Robe hook



FA-SN56851
Toilet roll holder



FA-SN56859
Soap holder



FA-SN56858
Tumbler holder



FA-SN56860
Towel ring



FA-SN56824
Single towel bar



FA-SN56848
Double towel bar

FA-SN55500 SERIES

Material: SUS304
Finish: Brush Nickel



FA-SN55554
Robe hook



FA-SN55559
Soap holder



FA-SN55558
Tumbler holder



FA-SN55551A
Toilet roll holder



FA-SN55556
Soap basket



FA-SN55560
Towel ring



FA-SN55552
Soap dispenser



FA-SN55524
Single towel bar



FA-SN55548
Double towel bar



FA-SN55588
Towel shelf



FA-SN55553
Glass shelf



FA-SN55557
Toilet brush & holder

Stainless steel series



New Arrival

FA-SN59600 SERIES

Material: SUS304
Finish: Brush nickel



FA-SN59654
Brush Nickel



FA-59654
Chrome



FA-QH59654
Gun Metal



FA-BK59654
Matte Black



FA-GD59654
Glod



FA-SG59654
Brushed Gold



FA-SN59654
Robe hook



FA-SN59659
Soap holder



FA-SN59658
Tumbler holder



FA-SN59651
Toilet roll holder



FA-SN59660
Towel ring



FA-SN59624
Single towel bar



FA-SN59657
Toilet brush & holder

FA-57600 SERIES

Material: SUS304
Finish: Mirror Poilsh



FA-57654
Robe hook



FA-57659
Soap holder



FA-57658
Tumbler holder



FA-57651
Toilet roll holder



FA-57651A
Toilet roll holder



FA-57660
Towel ring



FA-57653
Glass shelf



FA-57624
Single towel bar



FA-57648
Double towel bar



FA-57688
Towel shelf



FA-57657
Toilet brush & holder

FA-SN5400 SERIES

Material: SUS304
Finish: Brush Nickel



FA-SN5454
Robe hook



FA-SN5458
Tumbler holder



FA-SN5455
Double tumbler holder



FA-SN5452
Soap dispenser



FA-SN5459
Soap holder



FA-SN5456
Soap basket



FA-SN5451
Toilet roll holder



FA-SN5460
Towel ring



FA-SN5424
Single towel bar



FA-SN5448
Double towel bar



FA-SN5488
Towel shelf

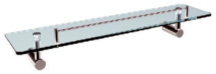

FA-SN5453
Glass shelf



FA-SN5402
Glass shelf



FA-SN5457
Toilet brush & holder

FA-55600 SERIES

Material: SUS304
Finish: Brush Nickel



FA-55654
Robe hook



FA-55659
Soap holder



FA-55658
Tumbler holder



FA-55651A
Toilet roll holder



FA-55656
Soap basket



FA-55660
Towel ring



FA-55652
Soap dispenser



FA-55624
Single towel bar



FA-55648
Double towel bar



FA-55688
Towel shelf



FA-55653
Glass shelf



FA-55657
Toilet brush & holder

FA-SN56300 SERIES

Material: SUS304
Finish: Brush Nickel



FA-SN56354
Robe hook



FA-SN56359
Soap holder



FA-SN56358
Tumbler holder



FA-SN56351A
Toilet roll holder



FA-SN56356
Soap basket



FA-SN56360
Towel ring



FA-SN56352
Soap dispenser



FA-SN56324
Single towel bar



FA-SN56348
Double towel bar



FA-SN56388
Towel shelf



FA-SN56353
Glass shelf



FA-SN56357
Toilet brush & holder

Stainless steel series





FA-58600 SERIES

Material: SUS304
Finish: Mirror Poilsh



FA-58654
Robe hook



FA-58651
Toilet roll holder



FA-58659
Soap holder



FA-58658
Tumbler holder



FA-58660
Towel ring



FA-58624
Single towel bar



FA-58648
Double towel bar



FA-58672
Toilet roll holder

3M ADHESIVE
BATHROOM SERIES



Strong Hold
Clean and Beautiful

No Drilling | Strong Adhesion | Waterproof | Modern Design



FROSTED GLASS
Elegant and easy to clean



PREMIUM METAL
Refined finish, durable



MODERN DESIGN
Match any bathroom style



3M STRONG ADHESIVE
Easy installation, no drilling



New Arrival

FA-BG61700 SERIES

Material: Zinc Stainless Steel
Finish: Matte Black&Gold

- Nail Free
- 3M Sticker



FA-BG61754
Robe hook



FA-BG61754A
Robe hook



FA-BG61759
Soap holder



FA-BG61758
Tumbler holder



FA-BG61751
Toilet roll holder



FA-BG61760
Towel ring



FA-BG61724
Single towel bar



FA-BG61751B
Toilet roll holder



FA-BG61757
Toilet brush & holder

Self-adhesive series

FA-61700 SERIES

Material: Zinc Stainless Steel
Finish: Chrome

New Arrival



• Nail Free
• 3M Sticker



FA-61754
Robe hook



FA-61754A
Robe hook



FA-61759
Soap holder



FA-61758
Tumbler holder



FA-61751
Toilet roll holder



FA-61760
Towel ring



FA-61724
Single towel bar



FA-61751B
Toilet roll holder



FA-61757
Toilet brush & holder

Self-adhesive series

FA-BK61700 SERIES

Material: Zinc Stainless Steel
Finish: Matte Black

New Arrival



• Nail Free
• 3M Sticker



FA-BK61754
Robe hook



FA-BK61754A
Robe hook



FA-BK61759
Soap holder



FA-BK61758
Tumbler holder



FA-BK61751
Toilet roll holder



FA-BK61760
Towel ring



FA-BK61724
Single towel bar



FA-BK61751B
Toilet roll holder



FA-BK61757
Toilet brush & holder

Self-adhesive series







- Nail Free
- 3M Sticker

FA-BG36500 SERIES

Material: SS AL ZN
Finish: Black Gold



FA-BG36554
Robe hook



FA-BG36559
Soap holder



FA-BG36558
Tumbler holder



FA-BG36551
Toilet roll holder



FA-BG36560
Towel ring



FA-BG36524
Single towel bar



FA-BG36553
Glass shelf



FA-BG36557
Toilet brush & holder



FA-36500 SERIES

- Nail Free
- 3M Sticker

Material: SS AL ZN
Finish: Chrome



FA-36554
Robe hook



FA-36559
Soap holder



FA-36558
Tumbler holder



FA-36551
Toilet roll holder



FA-36560
Towel ring



FA-36524
Single towel bar



FA-36553
Glass shelf



FA-36557
Toilet brush & holder

Self-adhesive series



FA-GD36500 SERIES

Material: SS AL ZN
Finish: Gold

• Nail Free
• 3M Sticker



FA-GD36554
Robe hook



FA-GD36559
Soap holder



FA-GD36558
Tumbler holder



FA-GD36551
Toilet roll holder



FA-GD36560
Towel ring



FA-GD36524
Single towel bar



FA-GD36553
Glass shelf



FA-GD36557
Toilet brush & holder





FA-BK36500 SERIES

• Nail Free
• 3M Sticker

Material: SS AL ZN
Finish: Matte Black



FA-BK36554
Robe hook



FA-BK36559
Soap holder



FA-BK36558
Tumbler holder



FA-BK36551
Toilet roll holder



FA-BK36560
Towel ring



FA-BK36524
Single towel bar



FA-BK36553
Glass shelf



FA-BK36557
Toilet brush & holder





FA-SN58100 SERIES

- Nail Free
- 3M Sticker

Material: SUS304
Finish: Brush Nickel



FA-58154
Mirror Polish



FA-SG58154
Brush Gold



FA-BK58154
Matte Black



FA-SN58154
Brushed Nickel



FA-SN58154
Robe hook



FA-SN58159
Soap holder



FA-SN58158
Tumbler holder



FA-SN58151
Toilet roll holder



FA-SN58160
Towel ring



FA-SN58124
Single towel bar

FA-36900 SERIES

Material: SUS304
Finish: Brush Nickel

Nail Free •
3M Sticker •



FA-SN36954
Robe hook



FA-SN36959
Soap holder



FA-SN36955
Double tumbler holder



FA-SN36952
Soap dispenser



FA-SN36951A
Toilet roll holder



FA-SN36951B
Toilet roll holder



FA-SN36960
Towel ring



FA-SN36924
Single towel bar



FA-SN36957
Toilet brush & holder





FA-BK57900 SERIES

Nail Free •
3M Sticker •

Material: SUS304
Finish: Matte Black



FA-BK57954
Robe hook



FA-BK57960
Towel ring



FA-BK57951
Toilet roll holder



FA-BK57951A
Toilet roll holder



FA-BK57924
Single towel bar



FA-BK57972
Toilet roll holder

FA-38600 SERIES

Nail Free •
3M Sticker •

Material: Zinc&SS
Finish: Chrome



FA-38654A
Robe hook



FA-38651
Toilet roll holder



FA-38658
Tumbler holder



FA-38660
Towel ring



FA-38624
Single towel bar



FA-38659
Soap holder

BATHROOM ACCESSORIES

BRASS SERIES

CRAFTED FOR A BETTER LIFE

Premium Brass Construction
Timeless Elegance

PREMIUM

BRASS SERIES

Refined Details
for Modern Bathrooms



Premium Brass

Durable & Reliable

Corrosion Resistant

Elegant Finish



SMOOTH EDGES
Comfortable and safe to use.



SOLID BRASS
Thick and sturdy construction.



FINE CRAFTSMANSHIP
Quality in every detail.

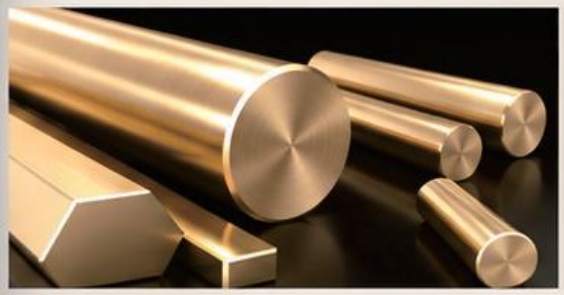

SELECTED BRASS

High-quality brass for long-lasting performance and refined texture.



FA-31900 SERIES

Material:Brass
Finish: Chrome



FA-31954
Robe hook

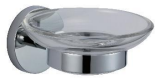

FA-31959
Soap holder



FA-31958
Tumbler holder



FA-31960
Towel ring



FA-31951A
Toilet roll holder



FA-31924
Single towel bar

FA-22700 SERIES

Material: Brass
Finish: Chrome



FA-22754
Robe hook



FA-22759
Soap holder



FA-22758
Tumbler holder



FA-22751A
Toilet roll holder



FA-22756
Soap basket



FA-22760
Towel ring



FA-22724
Single towel bar



FA-22748
Double towel bar



FA-22752
Soap dispenser

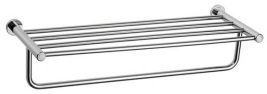

FA-22788
Towel shelf



FA-22753
Glass shelf



FA-22757
Toilet brush & holder

FA-88600 SERIES

Material: Brass
Finish: Chrome



FA-88654
Robe hook



FA-88659
Soap holder



FA-88658
Tumbler holder



FA-88651
Toilet roll holder



FA-88656
Soap basket



FA-88660
Towel ring



FA-88652
Soap dispenser



FA-88624
Single towel bar



FA-88648
Double towel bar



FA-88688
Towel shelf



FA-88653
Glass shelf



FA-88657
Toilet brush & holder

FA-37200 SERIES

Materialc: Brass
Finish: Chrome



FA-37254
Robe hook



FA-37259
Soap holder



FA-37258
Tumbler holder



FA-37252
Soap dispenser



FA-37251
Toilet roll holder



FA-37260
Towel ring



FA-37256
Soap basket



FA-37251B
Toilet roll holder



FA-37224
Single towel bar



FA-37248
Double towel bar

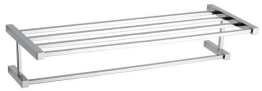

FA-37288
Towel shelf



FA-37253
Glass shelf



FA-37257
Toilet brush & holder





FA-BK5111
Kitchenware



FA-BK5611
Commodity Shelf



FA-BK606
Corner basket



FA-BK607
Corner basket



FA-BK5612
Condiment Holder



FA-BK3355
Kitchen Tissue



FA-BK5615
Commodity Shelf



FA-BK5616
Commodity Shelf



FA-BK5311
Spoon & folk holder



FA-BK5211
Knife holder



FA-BK5511
Dish holder



FA-BK5512
Bowl holder



FA-BK5911
Kitchenware holder



FA-BK5912
Kitchenware holder



FA-BK5711
Pot cover holder



FA-BK5712
Sponge holder

FA-WH729



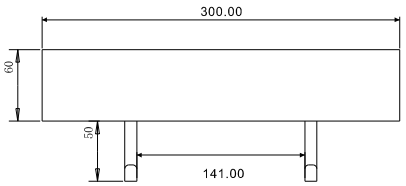

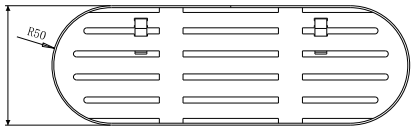

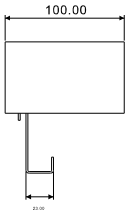

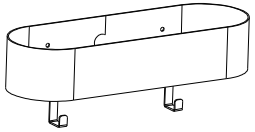

FA-QH739



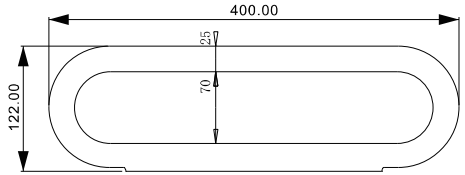

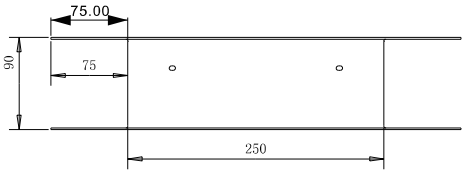

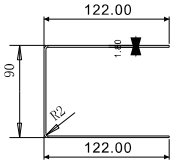



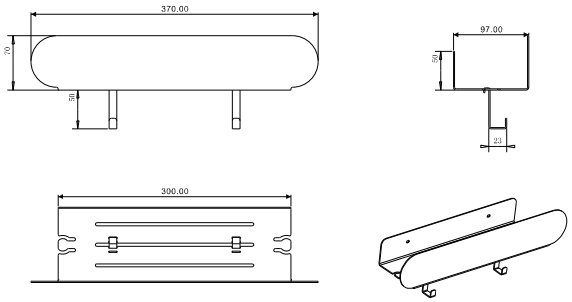

FA-WH727



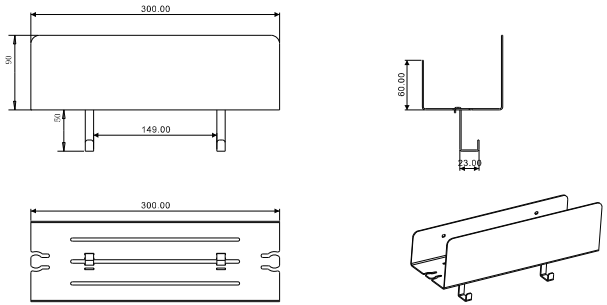

FA-BK728



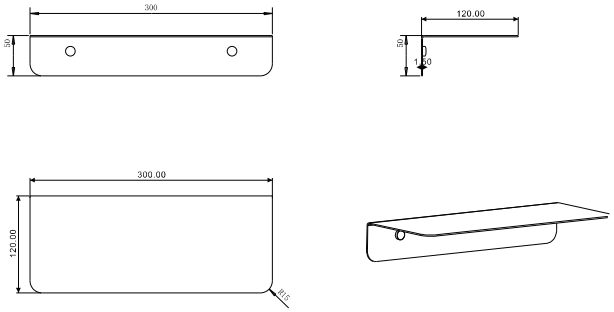

FA-WH751



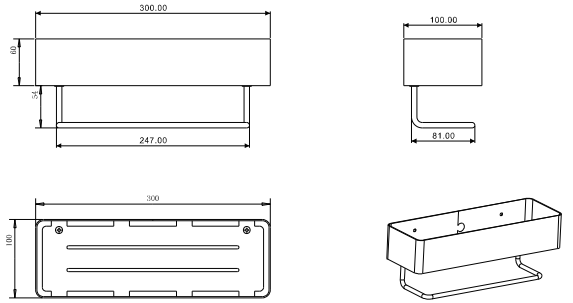

FA-731



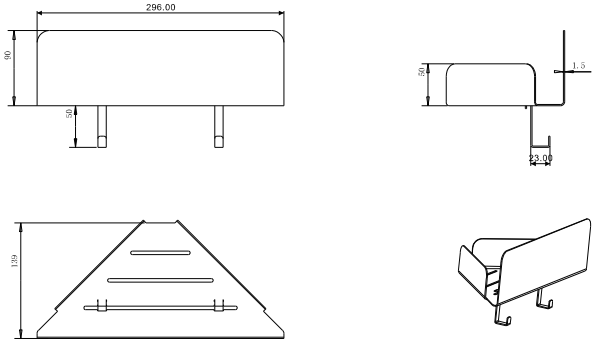

FA-725



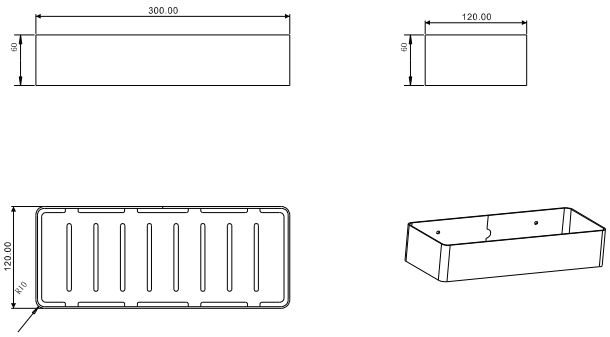

FA-732



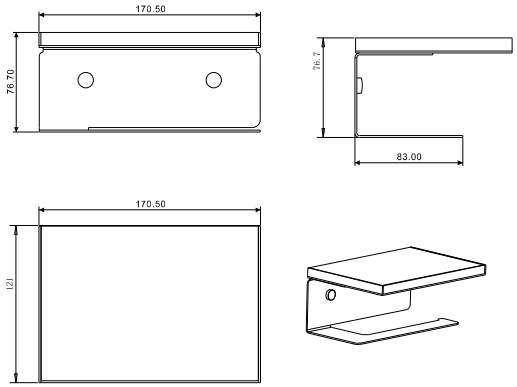

FA-733



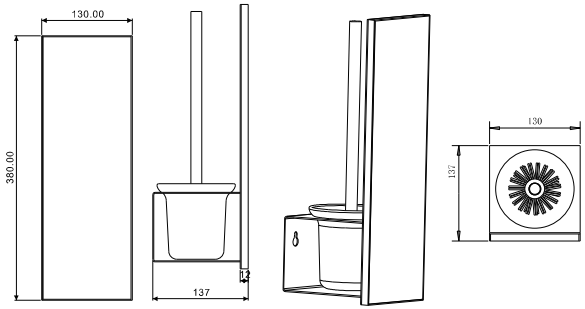

FA-735



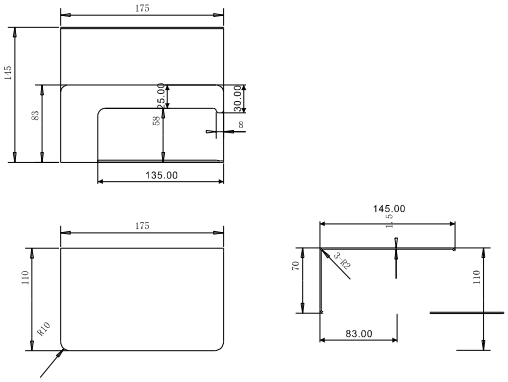

FA-736



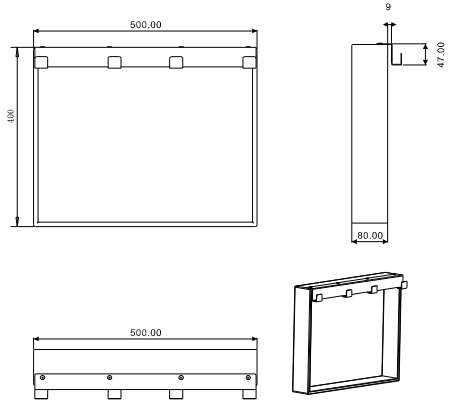

FA-715



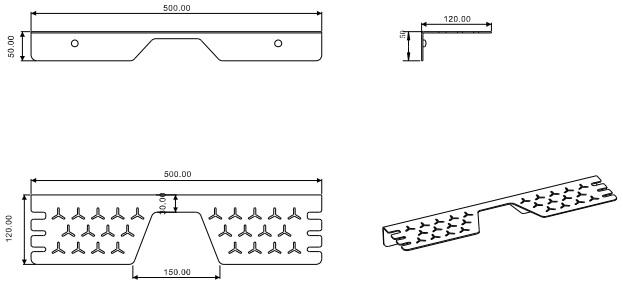

FA-737



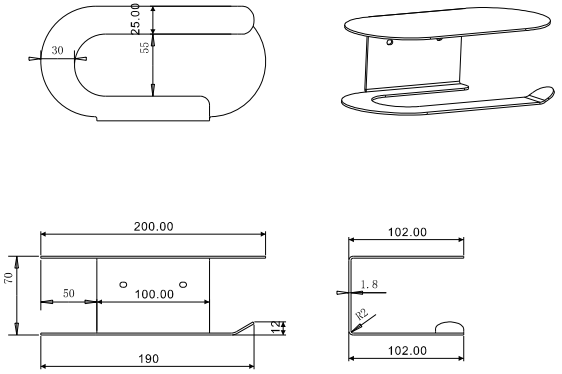

FA-738



Bathroom accessories set

Material:Aluminum

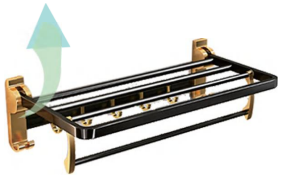

FA-BG6682
Towel shelf



FA-BG5815
Hooks



FA-BG3201
Double towel bar

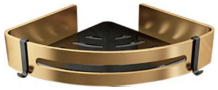

FA-BG613
Corne basket



FA-BG3201
Toilet roll box



FA-BG2568
Toilet brush & holder



Trash bin



FA-WH5012
Trash bin



FA-GN5012
Trash bin



FA-PK5012
Trash bin



FA-BK5012
Trash bin



FA-SN5012
Trash bin



FA-SG5012
Trash bin



FA-5012
Trash bin



FA-WD&CR5012
Trash bin



FA-5019
Trash bin



FA-WD&WH5019
Trash bin



FA-5020
Trash bin



FA-WD&BK5011
Trash bin



FA-5018
Trash bin





FA-WH0391
Clothes line



FA-WH0386
Clothes line



FA-SR0389
Clothes line



FA-GD0387
Clothes line



FA-0384
Clothes line



FA-0383
Clothes line



FA-0382
Clothes line



FA-0385
Clothes line

Hooks



FA-BK5811
Hooks



FA-5812
Hooks



FA-BK5812-2
Hooks



FA-5825
Hooks



FA-BK5830-5
Hooks



FA-BK5829-8
Hooks



FA-5813-4
Hooks



FA-BK5825-5
4-Hooks



FA-BK5823-5
Hooks



FA-BK5828-5
Hooks



FA-BK5822-4
Hooks

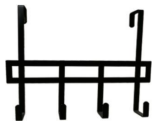

FA-BK5827
Door hooks



FA-WH5821
Door hooks



Towel Warmer

More Information Please Ask for our towel warmer catalogue



FA-TS201
Towel ladder



FA-TS301
Towel ladder



Towel shelf



FA-6696
Towel shelf



FA-6685
Towel shelf



FA-6697
Towel shelf



FA-BK6698
Towel shelf



FA-BK6699
Towel shelf



FA-BK6681
Towel shelf



FA-BK6695
Towel shelf



FA-GD6686
Towel shelf



FA-3802
Towel shelf



Cosmetic Mirror



FA-291
Cosmetic Mirror



FA-296
Cosmetic Mirror



FA-292-LED
Cosmetic with LED light Mirror



FA-365
Cosmetic Mirror



FA-BK281
Cosmetic Mirror



FA-269
Cosmetic Mirror



FA-283
Cosmetic Mirror



FA-297-LED
Cosmetic Cosmetic with LED light Mirror



FA-298-LED
Cosmetic Cosmetic with LED light Mirror





FA-531
Automatic soap dispenser



FA-566
Soap dispenser



FA-588
Automatic soap dispenser



FA-599
Soap dispenser



FA-505
Automatic soap dispenser



FA-370
Soap dispenser



FA-369
Soap dispenser



FA-501
Automatic soap dispenser



FA-528
Automatic soap dispenser



FA-525
Automatic soap dispenser



FA-502
Automatic soap dispenser



FA-503
Automatic soap dispenser



FA-526
Automatic soap dispenser



FA-3326
Toilet roll holder



FA-3328
Toilet roll holder



FA-3327
Toilet roll holder



FA-3325
Toilet roll holder



FA-3322
Toilet roll holder



FA-9702
Toilet roll holder



FA-3308
Toilet roll holder



FA-3311
Toilet roll holder



FA-3315
Toilet roll box



FA-3378
Toilet roll box



FA-3306
Toilet roll box



FA-3377
Toilet roll box



FA-3381
Tissue box



FA-3382
Toilet roll box



FA-3332
Toilet seat paper box



FA-3331
Toilet roll box



FA-3333
Toilet roll holder



FA-3335
Toilet roll holder



FA-3336
Toilet roll holder



FA-3337
Toilet roll holder



FA-3338
Toilet roll holder



FA-3339
Toilet roll holder



FA-3351
Toilet roll holder



FA-691
Corner basket
Material: Aluminium



FA-695
Basket
Material: Aluminium



FA-610
Basket
Material: Aluminium

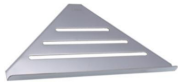

FA-611
Corner basket
Material: Aluminium



FA-674
Basket
Material: Stainless Steel



FA-QH658
Basket
Material: Stainless Steel



FA-BK608
Corner basket
Material: Stainless Steel



FA-BK612
Basket
Material: Aluminium



FA-BK609
Basket
Material: Aluminium



FA-640
Corner basket
Material: Stainless Steel



FA-641
Basket
Material: Stainless Steel



FA-BK699
Dirty corner basket
Material: Steel



FA-BK5514
Basket
Material: Steel



FA-BK5513
Basket
Material: Steel



FA-WH698
Double basket
Material: Steel



FA-BK702
Double basket
Material: Steel



FA-WH705
Double basket
Material: Steel



FA-BK5621
Double basket
Material: Steel



FA-662
Double corner basket
Material: Stainless Steel



FA-673
Double corner basket
Material: Stainless Steel



FA-692
Double corner basket
Material: Stainless Steel



FA-635
Double corner basket
Material: Stainless Steel



FA-659
Double basket
Material: Stainless Steel



FA-675
Double basket
Material: Stainless Steel



FA-696
Double basket
Material: Aluminium



FA-665
Double corner basket
Material: Stainless Steel



FA-8828
Floor drain



FA-8802
Floor drain



FA-8806
Floor drain

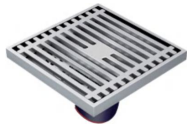

FA-8829
Floor drain



FA-8812
Floor drain



FA-8835
Floor drain



FA-SN8851A
Floor drain



FA-SN8851B
Floor drain



FA-8842
Floor drain



FA-SN8853
Floor drain



FA-8841
Floor drain



FA-8843
Floor drain-pop up

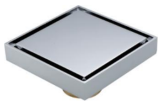

FA-8861
Floor drain

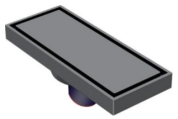

FA-QH8865
Floor drain



FA-8866
Floor drain

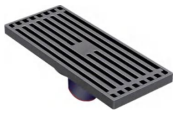

FA-QH8866
Floor drain



FA-SN8845
Floor drain



FA-SN8807
Floor drain



FA-SN8866
Floor drain



FA-SN8808
Floor drain



FA-SN8867-20
Floor drain



FA-SN8867
Floor drain





Safety grab bar

Customized size



FA-CW3922
Grab bar



FA-YW3922
Grab bar



FA-WH3917
Grab bar



FA-6605
Grab bar



FA-WH6605
Grab bar



FA-3913
Grab bar



FA-3911A
Grab bar



FA-3911
Grab bar



FA-3914
Grab bar

Inner Box

Customized size











































Inner Box

Customized size

























Outer Box

Customized size





